Brass Bullyte (BL16) Specification Sheet

Project Name:	Location:	MFG: Philips Hadco
Fixture Type:	Catalog No.:	Qty:

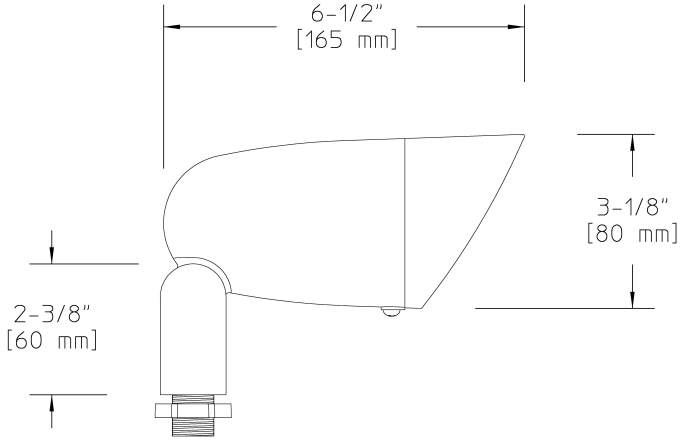

Ordering Guide

Example: BL16 N S7 BAB

Product Code	BL16	Brass Bullyte	
Finish	N OB	Natural Brass Oiled Brass	
Mounting	S7	Mounting Stake	*1
Lamp	BAB	20W MR16	*1

*1 Optional

Specifications

HOUSING:
Die-cast brass. Fully rotatable shroud, gasketed die-cast brass. Fully-adjustable swivel arm with vibration-proof locking teeth. ½" NPS male threads to screw onto accessory mounting stake or junction box, sold separately. Fasteners are 300 series stainless steel. Gasketing is silicone.

FINISH:
Natural Brass (N) is as-cast and tumble polished. HADCO's Oiled Brass (OB) is chemically dipped to achieve a dark pre-aged patina finish and the appearance will vary between production runs. Finishes will continue to patina over time making each fixture unique.

OPTICAL ASSEMBLY:
Clear tempered glass affixed at 10° angle for natural cleaning.

LAMPING:
50W maximum MR16 bi-pin lamp. Lower wattage lamps are acceptable. Covered MR16 are recommended to protect lamps inner capsule.

ELECTRICAL ASSEMBLY:
Bi-pin socket type (GU5.3) with 250° C high temperature teflon coated wire leads. Stainless steel retention clip affixed to socket to securely hold lamp in place. 12 Volt fixture is pre-wired with 3-ft pigtail of 18-2 AWG, 105° C, SPT-1W wire. Low voltage quick connector, catalog #LVC3 included for easy hook-up to the low voltage supply cable, not included. 12 Volt system requires remote transformer, not included.

WARRANTY:
Lifetime limited warranty.

CERTIFICATIONS:
ETL listed to U.S. safety standards for wet locations. cETL listed to Canadian safety standards for wet locations. Manufactured to ISO 9001:2008 Standards.

Width:
3 1/8" (80mm)

Length:
6 1/2" (165mm)

Max. Weight:
2.28 lb

PHILIPS HADCO
Note: Philips reserves the right to modify the above details to reflect changes in the cost of materials and/or production and/or design without prior notice.
100 Craftway Drive, Littlestown, PA 17340 | P: +1-717-359-7131 F: +1-717-359-9289 | http://www.hadco.com | Copyright 2013 Philips
HW2